Big-Flo Faucets

B-0291

TAG:

Big-Flo Mixing Faucet

Architect/Engineering Specifications:

8” wall mount large flow mixing faucet with polished chrome plated brass body, 18” swing nozzle with plain end outlet, compression spindles, 4-arm handles, 3/4” NPT female inlets and 3/4” NPT female short inlet elbows. Certified to ASME A112.18.1/CSA B125.1, NSF 61-Section 9 and NSF 372. Meets ADA ANSI/ICC A117.1 requirements.

Job Name_____
Model Specified_____Quantity_____
Variations Specified_____
Date_____

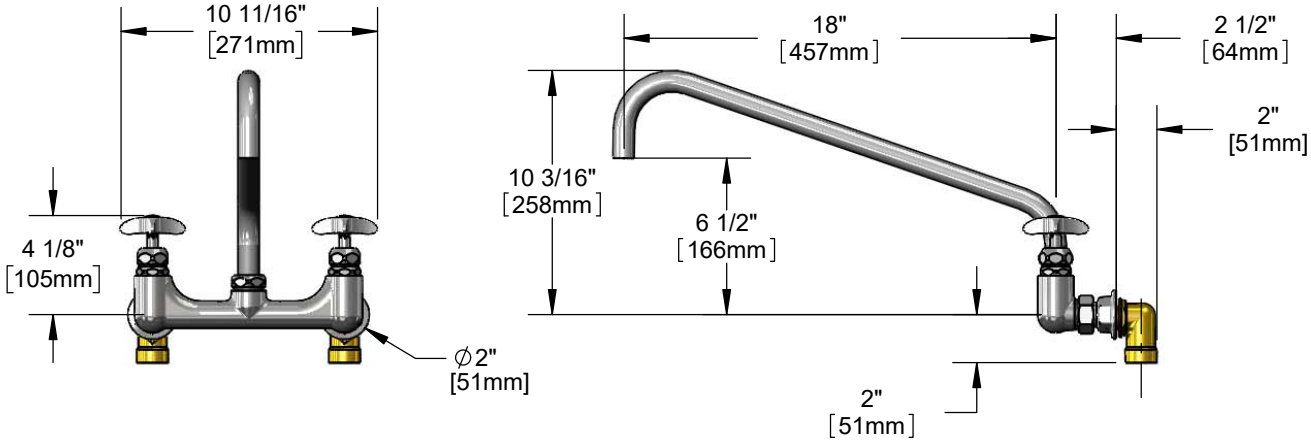

Features & Benefits:

- 8” wall mount Big-Flo mixing faucet w/ polished chrome plated brass body
- 18” Big-Flo plain end swing nozzle
- Lock washer provided for rigid application
- Big-Flo compression spindles
- 4-arm handles w/ color coded indexes
- 3/4” NPT female eccentric inlets w/ Ø 2” flanges
- Adjustable centers from 7 3/4" to 8 1/4“
- 3/4” NPT female short inlet elbows
- Material: Polished chrome plated brass body & tubular spout and chrome plated metal handles

Product Compliance:

- ASME A112.18.1 / CSA B125.1
- NSF 61 - Section 9
- NSF 372 (Low Lead Content)
- ANSI A117.1 (ADA)

Warranty: One Year (Limited)

Performance Data:

- Pressure: 20 - 125 psi
- Temperature: 40°F - 140°F
- Flow Rate: 44.27 GPM @ 60 psi

ADA Compliant

T&S BRASS AND BRONZE WORKS, INC.
• 2 Saddleback Cove • Travelers Rest, SC 29690
Ph 800-476-4103 • Fax 864-834-3518
• Simi Valley, CA • Ph 800-423-0150 • www.tsbrass.com

Date: 06/15/18