# Complete Hose Reel Systems

## B-7122-C1JXS5

**TAG:**

*Control Unit and Hose Reel Assembly*

**Architect/Engineering Specifications:**

Hose reel control unit, stainless steel water control cabinet containing 1/2òunion inlets and outlet, 1/2òcheck valves, loose key mixing valve with compression spindles, bi-metallic thermometer, dual check valve backflow preventer, shut-off valve and water hammer arrestor, hose reel connector kit with 1/2" NPT elbow, 18" riser and vacuum breaker, enclosed stainless steel hose reel with 3/8òx 30ôheavy-duty non-marking hose, ratcheting system, 1.07 GPM spray valve with swivel, multi-fit bracket and adjustable hose bumper. Certified to ASSE 1024, ASSE 1056 and ASSE 1010. 2019 DOE PRSV - Class II compliant.

Job Name_____

Model Specified_____Quantity_____

Variations Specified_____

Date_____

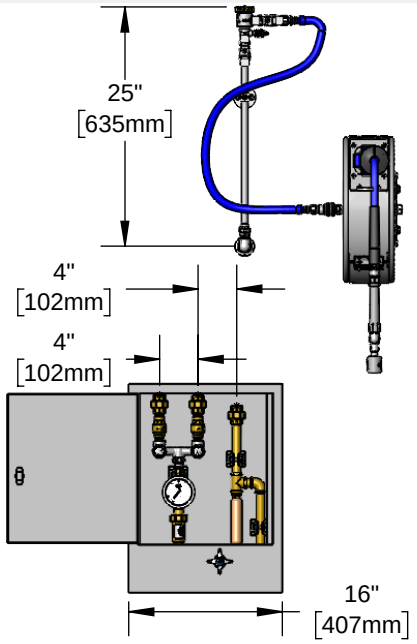


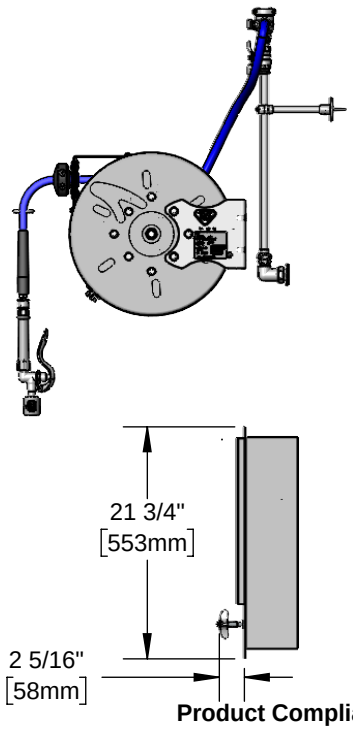


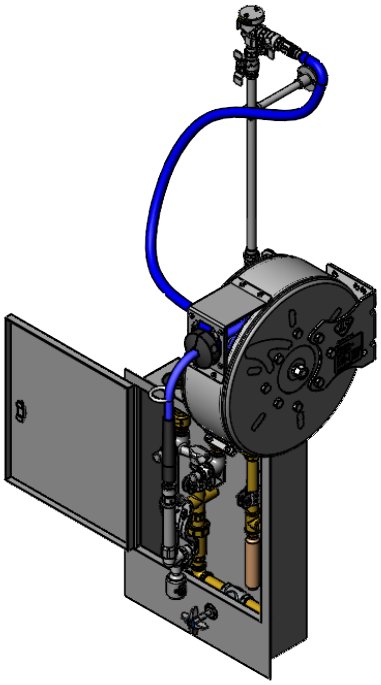

**Features & Benefits:**

- Å Flush mount stainless steel control cabinet with locking latch contains water control system
- Å 1/2òNPT female union inlets (2) and outlet
- Å 1/2òin-line check valves
- Å Loose key mixing valve with compression spindles, tee handles & screws
- Å Bi-metallic thermometer with ∅3òdial face
- Å Dual check valve backflow preventer
- Å 1/2" NPT inlet swivel elbow and flange
- Å EasyInstall 18" riser
- Å 6" wall bracket
- Å Continuous pressure vacuum breaker
- Å 36" flexible water hose connector with stainless steel quick disconnect
- Å Shut-off valve with 4-arm handle operable from outside of closed cabinet
- Å Enclosed stainless steel hose reel with 3/8òNPT female inlet
- Å 1.07 GPM spray valve w/ heat resistant gray handle, swivel and hold down ring
- Å 3/8òx 30ôheavy-duty non-marking hose rated to 300 PSI
- Å Ratcheting system holds the length of hose until a slight tug to retract automatically
- Å Adjustable hose bumper
- Å Multi-fit bracket for wall, ceiling or under counter mounting
- Å Material: Stainless steel cabinet, enclosed reel, chrome plated metal handle & brass control unit components

**Product Compliance:**

- Å NSF 61 Exempt (Non-Potable)
- Å 2019 DOE PRSV - Class II
- Å ASSE 1024 (VB)
- Å ASSE 1010 (Arrestor)
- Å ASSE 1056 (VB)

**Warranty:** Two Year (Limited)

- Å Hose: One Year (Limited)

**Performance Data:**

- Å Pressure: 20 - 125 psi [1.38 - 8.62 bar]
- Å Temperature: 40°F - 140°F [4.44°C - 60°C]
- Å Flow Rate: 1.07 GPM [4.1 L/min] @ 60 psi [4.14 bar]

**Optional Hose Reel Spray Valves**

| | |
|---|---|
| ☐ B-0107 | Spray Valve |
| ☐ B-0108 | Ergonomic Medium Flow Spray Valve |
| ☐ B-0108-H | Ergonomic High Flow Spray Valve |
| ☐ EB-0107 | High Flow Spray Valve |
| ☐ EB-2322 | Extended Spray Wand |
| ☐ MV-2516-24 | Stainless Steel Rear Trigger Water Gun |
| ☐ MV-2522-24 | Stainless Steel Front Trigger Water Gun |
| ☐ MV-3516-24 | Aluminum Rear Trigger Water Gun |


**T&S BRASS AND BRONZE WORKS, INC.**

Å2 Saddleback Cove ÅTravelers Rest, SC 29690
Ph 800-476-4103 ÅFax 864-834-3518
ÅSimi Valley, CA ÅPh 800-423-0150 Åwww.tsbrass.com


Date: 02/12/24