Medical and Lavatory Faucets

TAG:

B-0871

Centerset Lavatory Faucet

Architect/Engineering Specifications:

4" centerset deck mount mixing faucet with polished chrome plated brass body and integral spout, 2.2 GPM aerator, compression cartridges with spring checks, lever handles, 1/2" NPSM male inlets. Certified to ASME A112.18.1/CSA B125.1, NSF 61-Section 9 and NSF 372. Meets ADA ANSI/ICC A117.1 requirements.

Job Name_____
Model Specified_____Quantity_____
Variations Specified_____
Date_____

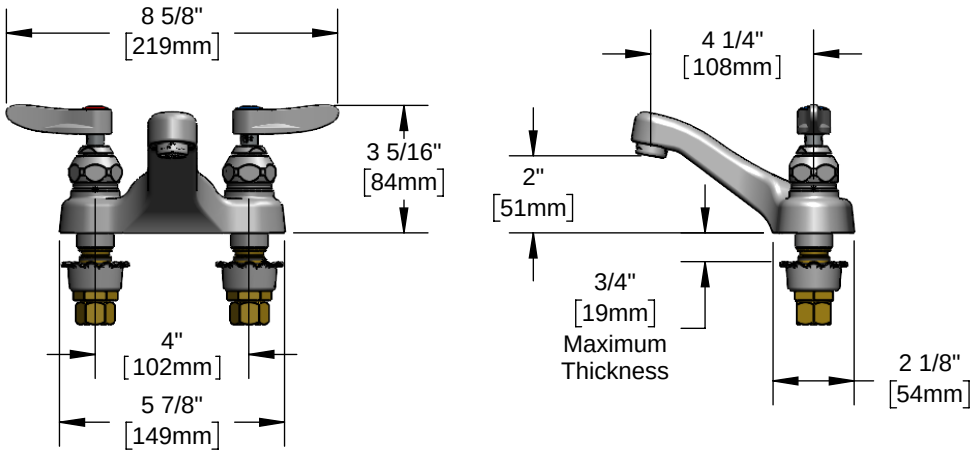

Features & Benefits:

- Å 4" centerset deck mount mixing faucet w/ polished chrome plated brass cast body and spout
- Å 2.2 GPM aerator, Series 3 (B-0199-03)
- Å Quarter-turn Eterna compression cartridges w/ spring checks to prevent cross flow of water
- Å Lever handles with color coded indexes
- Å 1/2" NPSM male inlets with coupling nuts
- Å Material: Polished chrome plated brass cast body & spout and chrome plated metal handles

Product Compliance:

- Å ASME A112.18.1 / CSA B125.1
- Å NSF 61 - Section 9
- Å NSF 372 (Low Lead Content)
- Å ANSI A117.1 (ADA)

Warranty: One Year (Limited)

ADA Compliant

Performance Data:

- Å Pressure: 20 - 125 psi [1.38 - 8.62 bar]
- Å Temperature: 40°F - 140°F [4.44°C - 60°C]
- Å Flow Rate: 2.2 GPM [8.3 L/min] @ 60 psi [4.14 bar]

Optional Outlets (Series 3 / VR Series 8)

GPM	Aerated	Non-Aerated (Laminar)	VR Aerated	VR Non-Aerated (VR Laminar)
0.35	N/A	☐ B-0199-03-N035	N/A	☐ B-0199-08-N035
0.5	N/A	☐ B-0199-03-N05	N/A	☐ B-0199-08-N05
1.0	N/A	N/A	N/A	☐ B-0199-08-LF10
1.2	☐ B-0199-03-F12	N/A	☐ B-0199-08-F12	N/A
1.5	☐ B-0199-03-WS	N/A	☐ B-0199-08-WS	☐ B-0199-08-LF15
2.2	Standard	☐ B-0199-26	☐ B-0199-08	☐ B-0199-28

Optional Handles

- ☐ 4" Wrist Action
- ☐ Lever (Standard)
- ☐ 4-Arm

Optional Cartridges

- ☐ Quarter-Turn Cerama w/ Check Valve
- ☐ Quarter-Turn Eterna w/ Spring Check (Standard)
- ☐ Push Button Metering
- ☐ Pivot Action Metering
- ☐ Wrist Action Metering

T&S BRASS AND BRONZE WORKS, INC.

Å2 Saddleback Cove ÅTravelers Rest, SC 29690
Ph 800-476-4103 ÅFax 864-834-3518
ÅSimi Valley, CA ÅPh 800-423-0150 Åwww.tsbrass.com

Date: 08/23/23